PUROTAP
by ELYSATOR™

Installation
Function
Operation
Maintenance

Operating instructions
PUROTAP® i-control-21s

ELYSATOR
engineering water

swiss made

Table of contents

1. Safety instructions 4

2. Function 5

3. Standard delivery 5
   3.1. PUROTAP® i-control-21s 5
   3.2. PUROTAP® i-control-21 5

4. Specification
   4.1. Device description 6
   4.2. Dimensions 7
   4.3. Performance data 7

5. Installation 8

6. Operation
   6.1. Switching on and off 9
   6.2. Adjusting the operating temperature 9
   6.3. Intervals between measuring cycles 10
   6.4. Fitted lock 10

7. Maintenance
   7.1. Changing the batteries 10
   7.2. Calibration 11

8. Spare parts 11

9. Accessories 11

1. Safety instructions

Not drinking water

Maximum 4 bar pressure up to 60 °C

Maximum 6 bar pressure up to 25 °C

Dust proof and protected against water jets from any angle

Never dispose of the device in household waste

2. Function

The PUROTAP® i-control-21 continuously monitors the system water, thereby enabling early detection of potential corrosion damage. This in turns helps to ensure fault-free operation of the heating or cooling system. The water quality on site is indicated by a flashing LED and can also be transmitted to an alert system via the floating contact. An external analogue indicator can also be connected.

3. Standard delivery

3.1. PUROTAP® i-control-21s

- PUROTAP® i-control-21
- Brass fitted lock
- EPP insulation
- Operating instructions
- Battery (integral)

3.2. PUROTAP® i-control-21

- PUROTAP® i-control-21
- Operating instructions
- Battery (integral)

4. Specification

4.1. Device description

1 Casing
2 Union nut (¾" female thread)
3 Flat gasket
4 Measuring probes
5 Connection for floating switching contact (max. 30 V 2 A), coaxial power connector part no. 102384

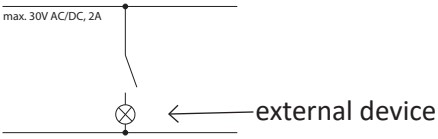

6 Connection for analogue output (4-20 mA, max. 24 V DC), coaxial power connector part no. 102384

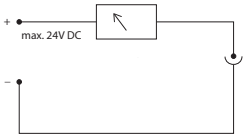

7 Connection for external power supply (5 V DC, 0.5 A), micro USB connector

Front view

Conductivity
Green flashing LED (good)
Yellow flashing LED (caution required)
Red flashing LED (check required)

Insulated fitted lock

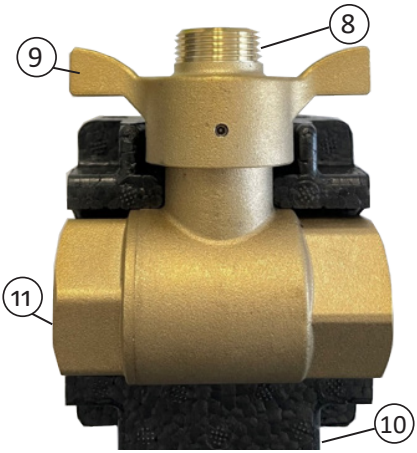

8 Connection (¾" male)
9 Butterfly handle, operation and service function
10 Insulation (EPP)
11 Connections on both sides (1" female)

4.2. Dimensions

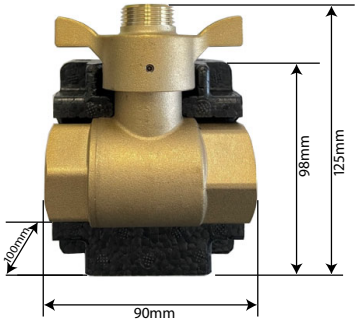

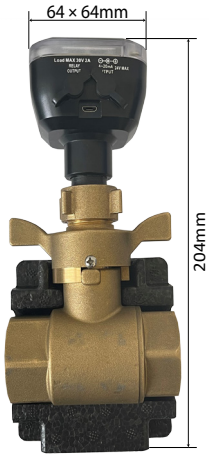

4.3. Performance data

	PUROTAP® i-control-21
Display 3 LED (green)	Good = 0 to ~ 200 µS/cm
Display 3 LED (orange)	Caution required = ~ 200 to ~ 300 µS/cm

Display 3 LED (red)	Check required = > 300 µS/cm
Operating temperature	+10 °C to +60 °C (+50 °F to +140 °F)
Max. pressure	6 bar up to 25 °C / 4 bar up to 60 °C
Relay output	Coaxial power connector; outer ø 5.5 mm, inner ø 2.5 mm, l = 9.5 mm, actuated when red LED = > 300 µS/cm (only actuated when connected to an external power supply) Floating output max. 30 V AC/DC max. 2 A
4-20 mA output	Coaxial power connector outer ø 5.5 mm, inner ø 2.5 mm, l = 9.5 mm max. 24 V DC 0 µS/cm = 4 mA 300 µS/cm = 20 mA
IP degree of protection	IP 65
Power supply int.	Lithium battery 3.6 V, 1200 mAh (ER14250)
Power supply ext.	Via micro USB (5 V DC, 0.5 A max.)

5. Installation

The PUROTAP® i-control-21 is installed in the water circuit (flow or return). The optional PUROTAP® i-control-21 insulated fitted lock (part no. 102 379) is recommended. This has G1" female thread connections (DIN ISO 228, parallel thread).
It allows the PUROTAP® i-control-21 plugged into the butterfly handle and screwed tight with the union nut without water loss in the system. Turning the butterfly handle then opens the water circuit again on both sides (handle from inlet to outlet = open, handle across = closed).

6. Operation

To operate the device, the transparent cover must be removed by undoing the two screws. The circuit board is then lifted to remove the protective tab of the battery underneath.

6.1. Switching on and off

Briefly pressing the button once switches the device on. Pressing the button again (also briefly) switches the device off again. .

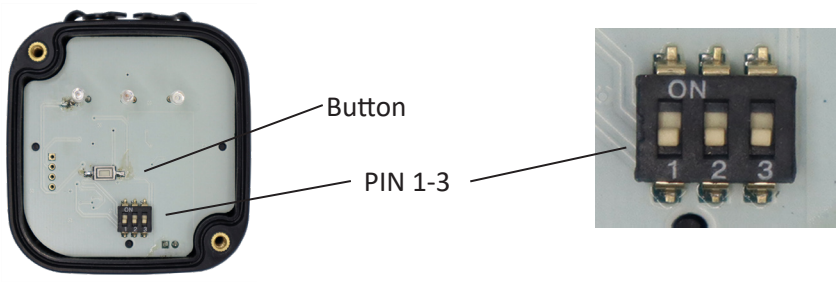

6.2. Adjusting the operating temperature

To display the conductivity measurement correctly, the maximum anticipated operating temperature of the system must be set.

PIN setting

Max. operating temperature	PIN 1	PIN 2	PIN 3
25 °C	0 (OFF)	0 (OFF)	x (any)
20 °C	0 (OFF)	1 (ON)	x (any)
40 °C	1 (ON)	0 (OFF)	x (any)
60 °C	1 (ON)	1 (ON)	x (any)

6.3. Intervals between measuring cycles

The intervals between the measurements can be adjusted using PIN 3. Position «ON» means that the conductivity is measured every 20 seconds. Position «OFF» means that a measurement is carried out every 2 seconds. The measurement result is indicated via the LEDs immediately after the measurement and is output at the analogue and floating contacts respectively.

Measuring cycle	PIN1	PIN2	PIN3
Quick (every 2 seconds)	X (any)	X (any)	0 (OFF)
Slow (every 20 seconds)	X (any)	X (any)	1 (ON)

Each measurement requires energy. In battery mode, short intervals between the measurements significantly reduce battery life!

6.4. Fitted lock

Integral disconnection in the unique fitted lock enables the measurement probe to be removed or replaced without any water leaking out and causing the pressure in the system to drop. The fitted lock has a 1" female thread on both sides and causes virtually no pressure drop.

7. Maintenance

7.1. Battery replacement

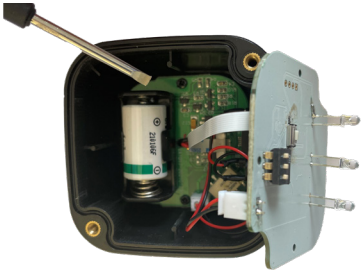

When the orange and red LEDs flash simultaneously, the battery needs replacing. Undo the two screws in the transparent cover, lift off the cover, carefully raise the circuit board and insert the new battery (PUROTAP® i-control-21, replacement battery part no. 102373). Make sure the cover seal is seated properly. Refit the cover and secure with the

screws. Check the device is working correctly.

7.2. Calibration

The device has already been set and calibrated at the factory. However, re-calibration can be carried out at any time. Dip the selected probe into 300 µS/cm calibration solution. Ensure that the solution is at the correct temperature of +25 °C (PIN 1 + 2 must be set for 25 °C (0 (OFF) / 0 (OFF)). Press the small button on the circuit board, hold it down for more than 4 seconds and then release it. All 3 LEDs should flash briefly once; the device has now been recalibrated.

8. Spare parts

Item no.	Designation
102 373	PUROTAP® i-control-21, replacement battery
102 222	PUROTAP® i-control-21, insulation
102 221	PUROTAP® i-control-21, brass fitted lock, G1" female thread on both sides (without insulation)

9. Accessories

Item no.	Designation
102 379	PUROTAP® i-control-21, fitted lock insulated
102 384	PUROTAP® i-control-21, coaxial power connector (for floating contact and analogue output)
102 321	PUROTAP® i-control-21, power supply unit
102 334	PUROTAP® i-control-21, adaptor (only for the installation in old lock)

All rights and technical modifications reserved.
The current version can be found at www.elysator.com.